DBS-40F
Replacement Parts

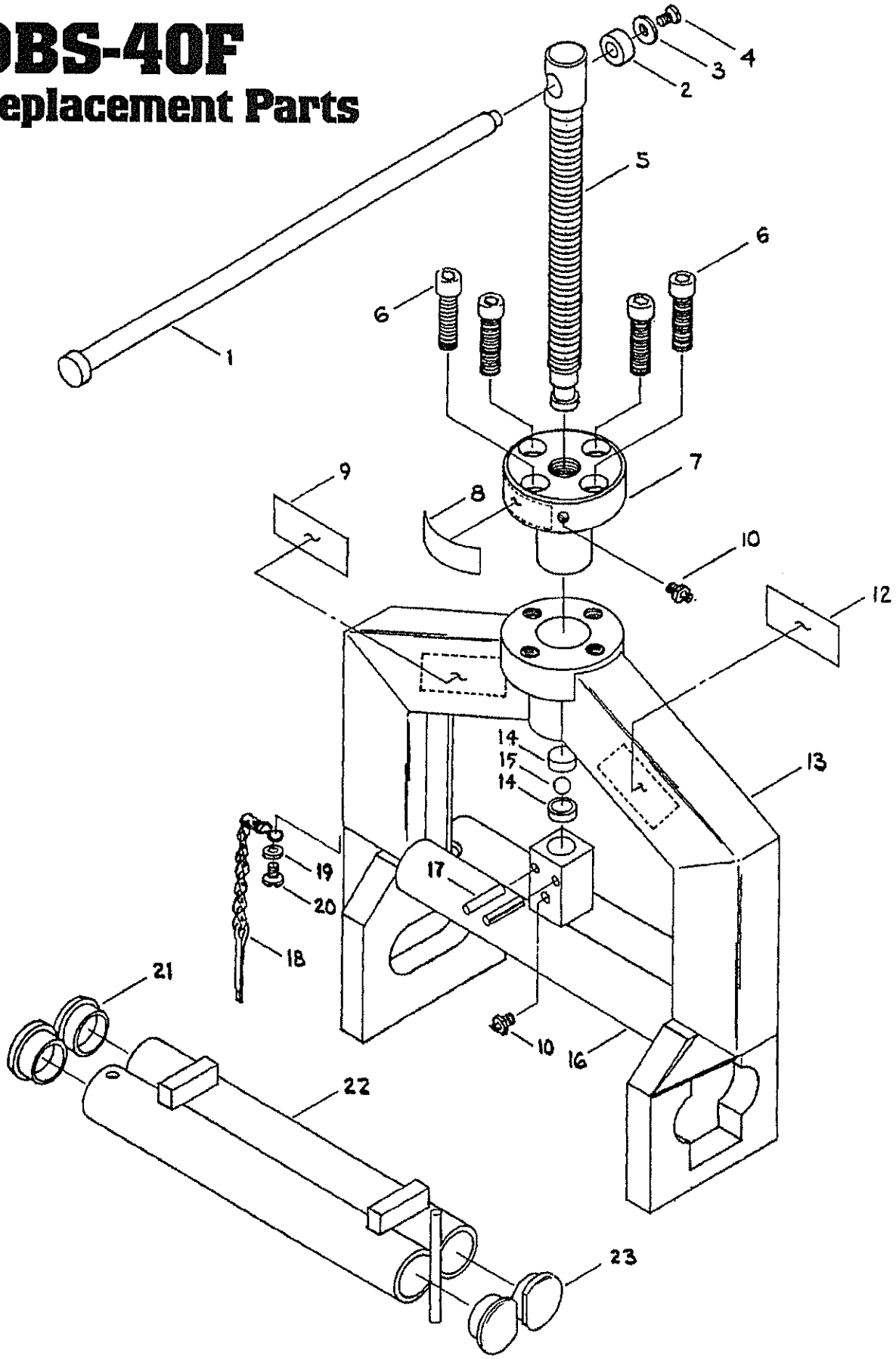

MUSTANG Squeeze Tools

2401 Lockheed Way
Carson City, NV 89706

775.883.0732 Tel
775.883.3372 Fax

mustangmfg@gbis.com
www.squeezetool.com

MUSTANG MODEL DBS-40F
MANUAL SQUEEZE TOOL PARTS LIST

ITEM	DESCRIPTION	QTY.	PART NO.
1	**HANDLE (PLEASE SPECIFY OLD/NEW STYLE PER BELOW) ***		
	HANDLE (NEW STYLE) 11/16" Dia. X 24" Long	1	4-44F
	HANDLE (OLD STYLE) 5/8" Dia. X 18" Long	1	4-44OS
2	HANDLE BUTTON *	1	404-6
3	1/4" FLAT WASHER *	1	404-1
4	1/4"-20 x 3/8" SLOTTED PAN HEAD SCREW *	1	404-3
	*** HANDLE ASSEMBLY - COMPLETE (NEW STYLE) 11/16" Dia. X 24" Long**	1	444-4HA
	(Includes: Handle, Button, Washer & Screw)		
	*** HANDLE ASSEMBLY - COMPLETE (OLD STYLE) 5/8" Dia. X 18" Long**	1	444-5OS
	(Includes: Handle, Button, Washer & Screw)		
5	**POWER SCREW (PLEASE SPECIFY OLD/NEW STYLE PER BELOW)**		
	POWER SCREW (OLD STYLE) (Handle Dia. 5/8" x 18" Long)	1	2-40OS
	POWER SCREW (NEW STYLE) (Handle Dia. 11/16" x 24" Long)	1	1-40C
6	1/2"-13 NC x 1 3/4" SOCKET HEAD CAP SCREW	4	404-4
7	BOLT ON DRIVE NUT	1	103-40F
8	NAMEPLATE/CAUTION STICKER	1	14-8
9	NAMEPLATE/MODEL CAPACITY **(Please specify sizes)**	1	40-9
10	GREASE FITTING	1	404-13
12	NAMEPLATE/MANUAL OPERATION	1	14-10
13	DBS-40F FRAME WELDMENT (W/O UPPER JAW & POWER SCREW)	1	140-2
14	BEARING RACE **(PAIR)**	2	404-8
15	1/2" DIA. BALL BEARING	1	404-7
16	UPPER JAW WELDMENT	1	6-840F
17	3/16" Dia. X 1 1/4" ROLL PIN	2	404-5
18	CHAIN & PIN	1	404-9
19	#10 FLAT WASHER	1	404-19
20	10-32 X 3/8" SLOTTED PAN HEAD SCREW	1	404-10
21	LOWER JAW END PLUG - SIZE **(Please specify sizes)**	2	404-11
22	**LOWER JAW (PLEASE SPECIFY OLD/NEW STYLE PER BELOW)**		
	LOWER JAW (NEW STYLE) Length 11 1/2" (OLD STYLE) Length 12 1/4"	1	LJ-40F
23	LOWER JAW END PLUG - CUT	2	404-12