# DBS-44F
## Replacement Parts

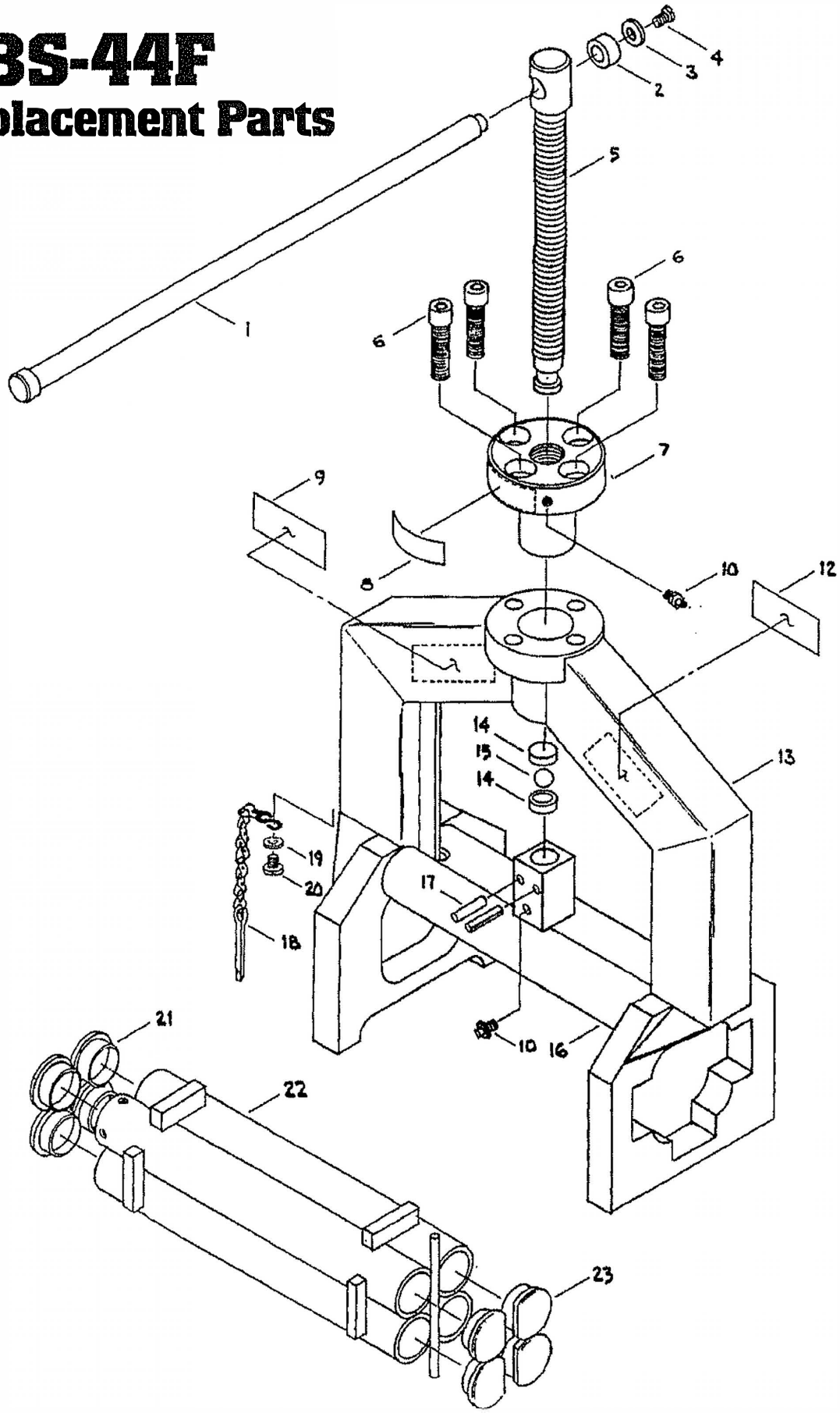



**MUSTANG** Squeeze Tools

2401 Lockheed Way
Carson City, NV 89706

775.883.0732 Tel
775.883.3372 Fax

mustangmfg@gbis.com
www.squeezetool.com

**MUSTANG MODEL DBS-44F**
**MANUAL SQUEEZE TOOL PARTS LIST**

| ITEM | DESCRIPTION | QTY. | PART NO. |
|---|---|---|---|
| | | | |
| 1 | **HANDLE (NEW STYLE) 11/16" Dia. X 24" Long** | 1 | 4-44F |
| | **OLD STYLE HANDLE (18" Long) NO LONGER AVAILABLE.** | | |
| 2 | HANDLE BUTTON * | 1 | 404-6 |
| 3 | 1/4" FLAT WASHER * | 1 | 404-1 |
| 4 | 1/4" - 20 X 3/8" SLOTTED PAN HEAD SCREW * | 1 | 404-3 |
| | | | |
| | *** HANDLE ASSEMBLY - COMPLETE (NEW STYLE) 11/16" Dia. X 24" Long** | 1 | 444-4HA |
| | (Incl. Handle, Button, Washer & Screw) | | |
| | | | |
| | *** OLD STYLE HANDLE ASSEMBLY (18" Long) NO LONGER AVAILABLE.** | | |
| | | | |
| 5 | POWER SCREW **(NEW STYLE) (Handle Dia. 11/16" x 24" Long)** | 1 | 1-40C |
| | **OLD STYLE POWER SCREW (for 18" Long handle) NOT AVAILABLE.** | | |
| | | | |
| | | | |
| | | | |
| 6 | 1/2" - 13 NC x 1 3/4" Socket Head Cap Screw | 4 | 404-4 |
| 7 | BOLT ON DRIVE NUT | 1 | 103-40F |
| 8 | NAMEPLATE/CAUTION STICKER | 1 | 14-8 |
| 9 | NAMEPLATE- MODEL/CAPACITY **(Please specify sizes)** | 1 | 40-9 |
| 10 | GREASE FITTING | 1 | 404-13 |
| 12 | NAMEPLATE/MANUAL OPERATION | 1 | 14-10 |
| 13 | DBS-44F FRAME WELDMENT (W/O UPPER JAW & POWER SCREW) | 1 | 144-2 |
| 14 | BEARING RACE **(PAIR)** | 2 | 404-8 |
| 15 | BALL BEARING | 1 | 404-7 |
| 16 | UPPER JAW WELDMENT | 1 | 6-840F |
| 17 | 3/16" Dia X 1 1/4" ROLL PIN | 2 | 404-5 |
| 18 | CHAIN & PIN | 1 | 404-9 |
| 19 | #10 FLAT WASHER | 1 | 404-19 |
| 20 | 10-32 X 3/8" SLOTTED PAN HEAD SCREW | 1 | 404-10 |
| 21 | LOWER JAW END PLUG - SIZE **(Please specify sizes)** | 4 | 404-11 |
| | | | |
| 22 | **LOWER JAW (NEW STYLE) Length 11 1/2"** | | LJ-44F |
| | **LOWER JAW (OLD STYLE) Length 12 1/4" NO LONGER AVAILABLE.** | | |
| | | | |
| 23 | LOWER JAW END PLUG - CUT | 4 | 404-12 |
| | | | |
| | | | |
| | | | |
| | | | |
| | | | |
| | | | |